SC TECHNOMILL S.R.L.
J 32/409/2002, CIF 14704987, atribut Fiscal: RO
Cap.social: 400.000 lei
Str. Selimbarului, nr. 34, Cisnadie, Sibiu, 555300
Tel.:+40 269-561 862; 0269-564 227
Fax:+ 40 269-561 155

web: www.technomill.ro
e-mail:contact@technomill.ro

Tabel dimensiuni
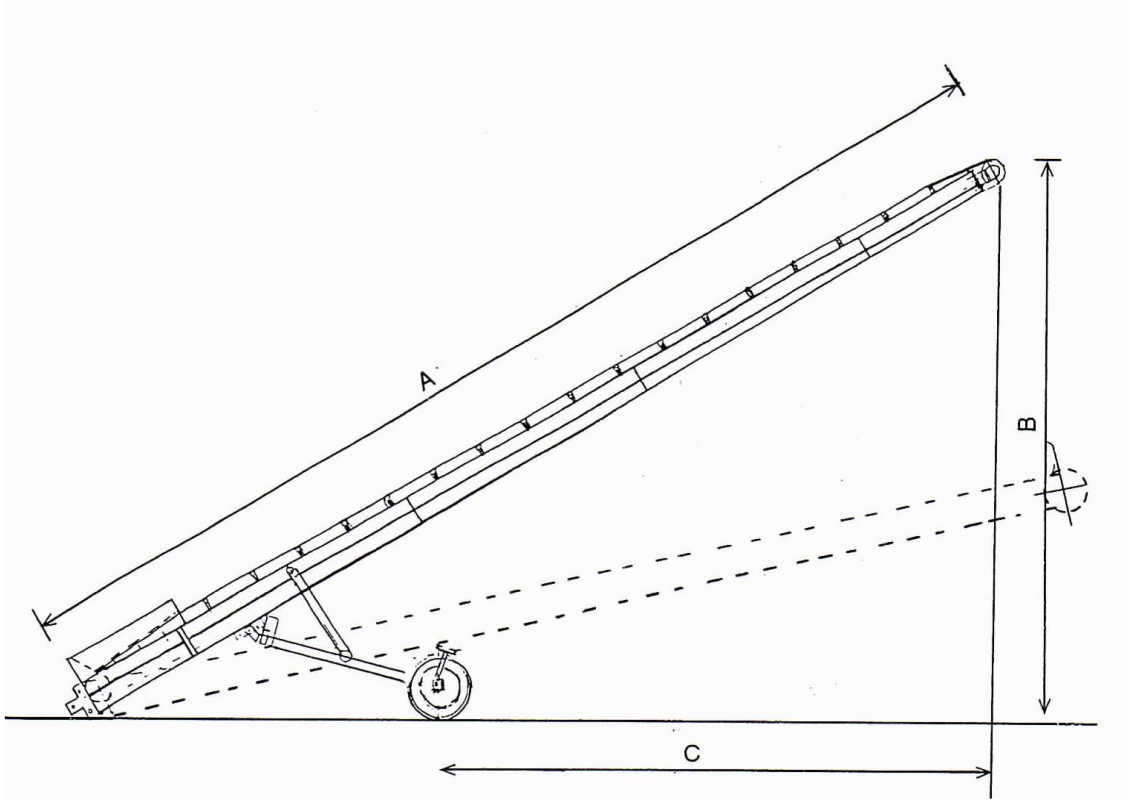
MODEL	LUNGIME TOTALA A	INALTIME MAX B	C
BM 8M	8M	4.M	4.8M
BM 10M	10M	5.M	5.8M
BM 12M	12M	6.M	7.M
BM 15M	15M	7.M	8.5M