Poziţie	Cant.	Descriere
	1	**MAGNA1 32-120 F**

Notă! Poza de produs poate diferi de produsul actual

Nr. Produs: 97924167

MAGNA1 circulator pump with easy selection of pump setting
The pump is of the canned-rotor type, i.e. pump and motor form an integral unit without shaft seal and with only two gaskets for sealing.
The bearings are lubricated by the pumped liquid.
In order to avoid problems in connection with disposal, great importance has been attached to using as few different materials as possible.
A pump with no maintenance requirements and extremely low life cycle cost.

Heating systems
• Main pump
• mixing loops
• heating surfaces
• air-conditioning surfaces.
The MAGNA1 circulator pumps are designed for circulating liquids in heating systems with variable flows where it is desirable to optimise the setting of the pump duty point, thus reducing energy costs. The pumps are also suitable for domestic hot-water systems.
To ensure correct operation, it is important that the sizing range of the system falls within the duty range of the pump.
The pump is also suitable for systems with hot-water priority as an external signal can immediately force the pump to operate according to the max. curve, for example in solar-heating systems.

Benefits
• Safe selection.
• Simple installation.
• Low energy consumption. All MAGNA1 pumps comply with the EuP requirements.
• Nine light fields for indication of pump setting. Three proportional-pressure curves, three constant-pressure curves and three fixed-speed curves are available.
• Low noise level.
• No mainteance and long life.

Liquid:

Lichide pompate:	Apă
Gama temperaturii lichidului:	-10 .. 110 °C
Temp. lichid:	20 °C
Densitate:	998.2 kg/m³

Technical:

Clasa TF:	110
Aprobări pe etichetă:	CE,VDE,PCT

Poziţie	Cant.	Descriere

Materials:

Corpul pompei (stator):	Fontă EN-GJL-250 ASTM A48-250B
Rotor:	PES 30%GF

Instalaţie:

Gama temperaturii ambientale:	0 .. 40 °C
Presiune de funcţionare maximă:	10 bar
Tip flanşă:	DIN
Racordarea pompei la instalaţie:	DN 32
Presiune maximă de funcţionare:	PN6/10
Distanţa dintre porturi:	220 mm

Electrical data:

Power input - P1:	14.89 .. 329 W
Curent consumat maxim:	0.17 .. 1.48 A
Frecvenţa reţelei electrice:	50 Hz
Tensiune nominală:	1 x 230 V
Grad de protecţie (IEC 34-5):	X4D
Clasă de izolare (IEC 85):	F

Others:

Label:	Grundfos Blueflux
Energy (EEI):	0.21
Greutate netă:	15.4 kg
Greutate brută:	17.1 kg
Volum de transport:	0.04 m³

97924167 MAGNA1 32-120 F 50 Hz

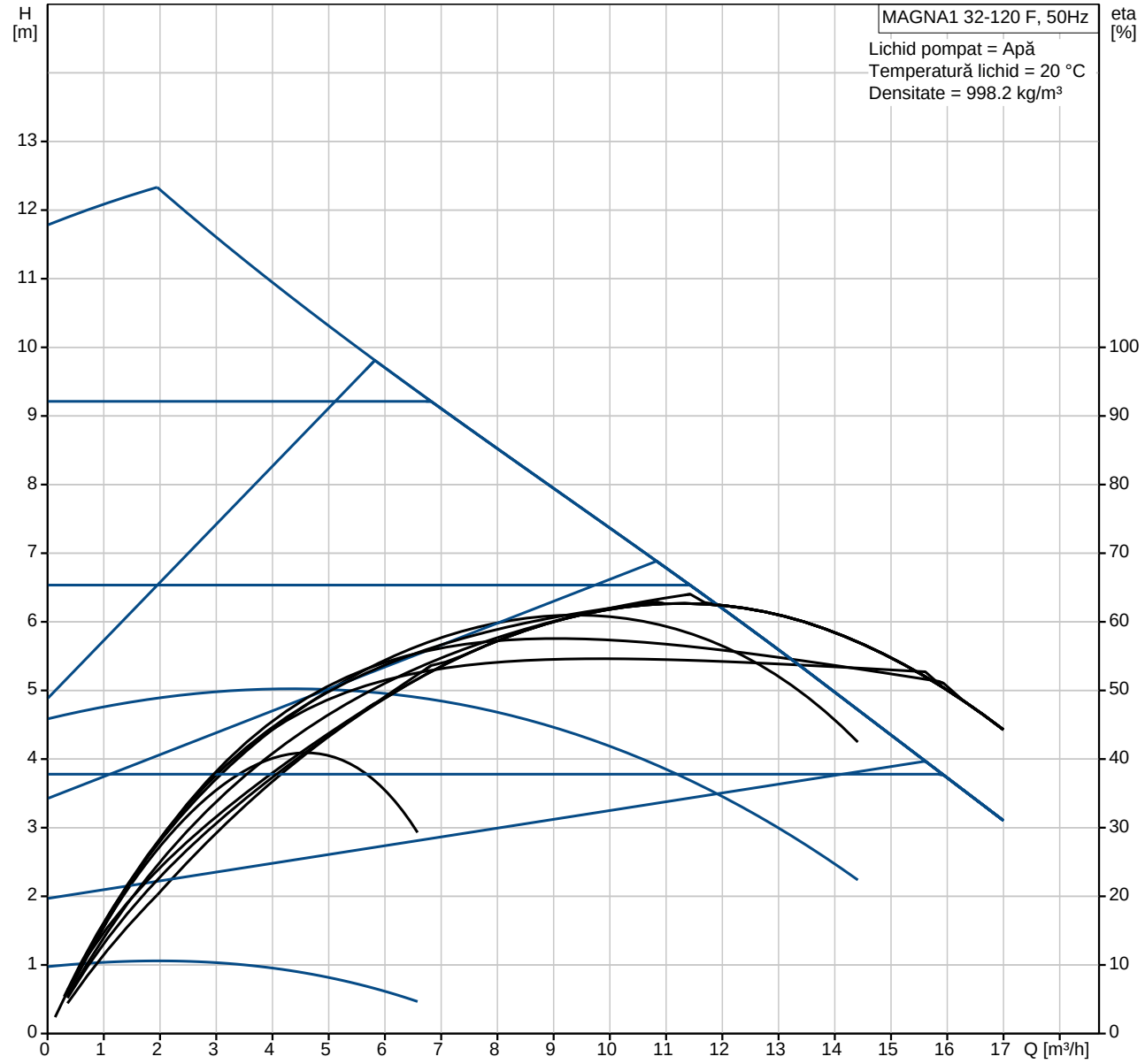

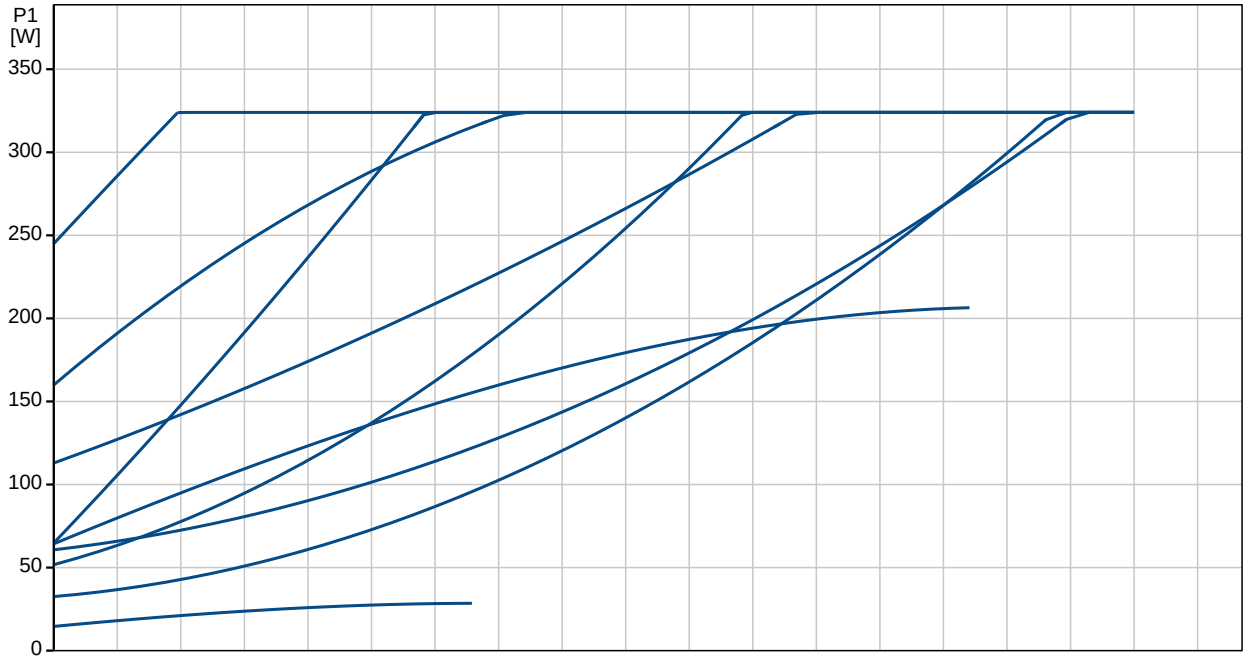

Descriere	Valori şi tipuri
Nume produs:	MAGNA1 32-120 F
Nr. produs:	97924167
Numărul EAN:	5710626492411
Technical:	
Înălţime de pompare max.:	120 dm
Clasa TF:	110
Aprobări pe etichetă:	CE,VDE,PCT
Model:	A
Materials:	
Corpul pompei (stator):	Fontă
	EN-GJL-250
	ASTM A48-250B
Rotor:	PES 30%GF
Instalaţie:	
Gama temperaturii ambientale:	0 .. 40 °C
Presiune de funcţionare maximă:	10 bar
Tip flanşă:	DIN
Racordarea pompei la instalaţie:	DN 32
Presiune maximă de funcţionare:	PN6/10
Distanţa dintre porturi:	220 mm
Liquid:	
Lichide pompate:	Apă
Gama temperaturii lichidului:	-10 .. 110 °C
Temp. lichid:	20 °C
Densitate:	998.2 kg/m³
Electrical data:	
Power input - P1:	14.89 .. 329 W
Curent consumat maxim:	0.17 .. 1.48 A
Frecvenţa reţelei electrice:	50 Hz
Tensiune nominală:	1 x 230 V
Grad de protecţie (IEC 34-5):	X4D
Clasă de izolare (IEC 85):	F
Others:	
Label:	Grundfos Blueflux
Energy (EEI):	0.21
Greutate netă:	15.4 kg
Greutate brută:	17.1 kg
Volum de transport:	0.04 m³

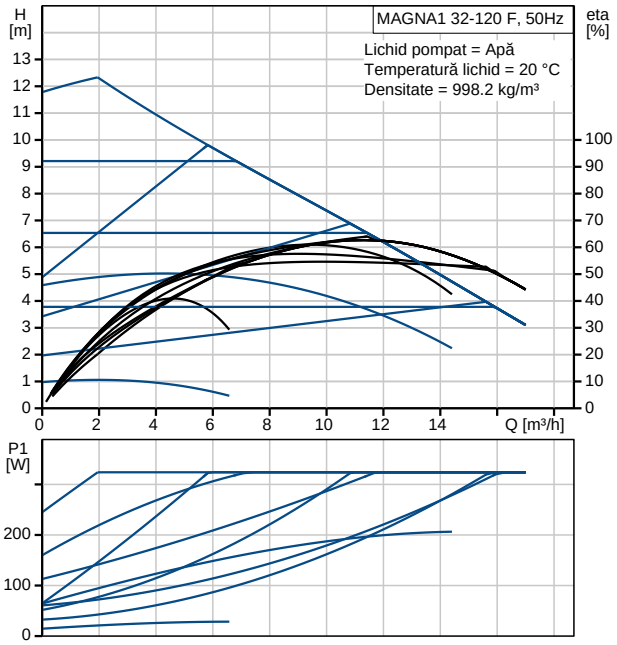

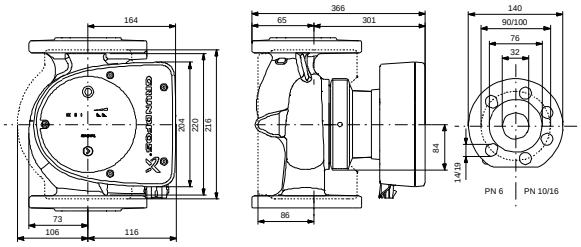

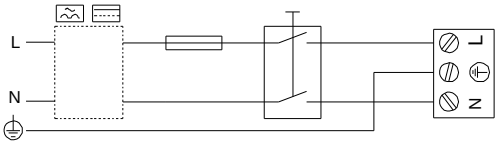

97924167 MAGNA1 32-120 F 50 Hz

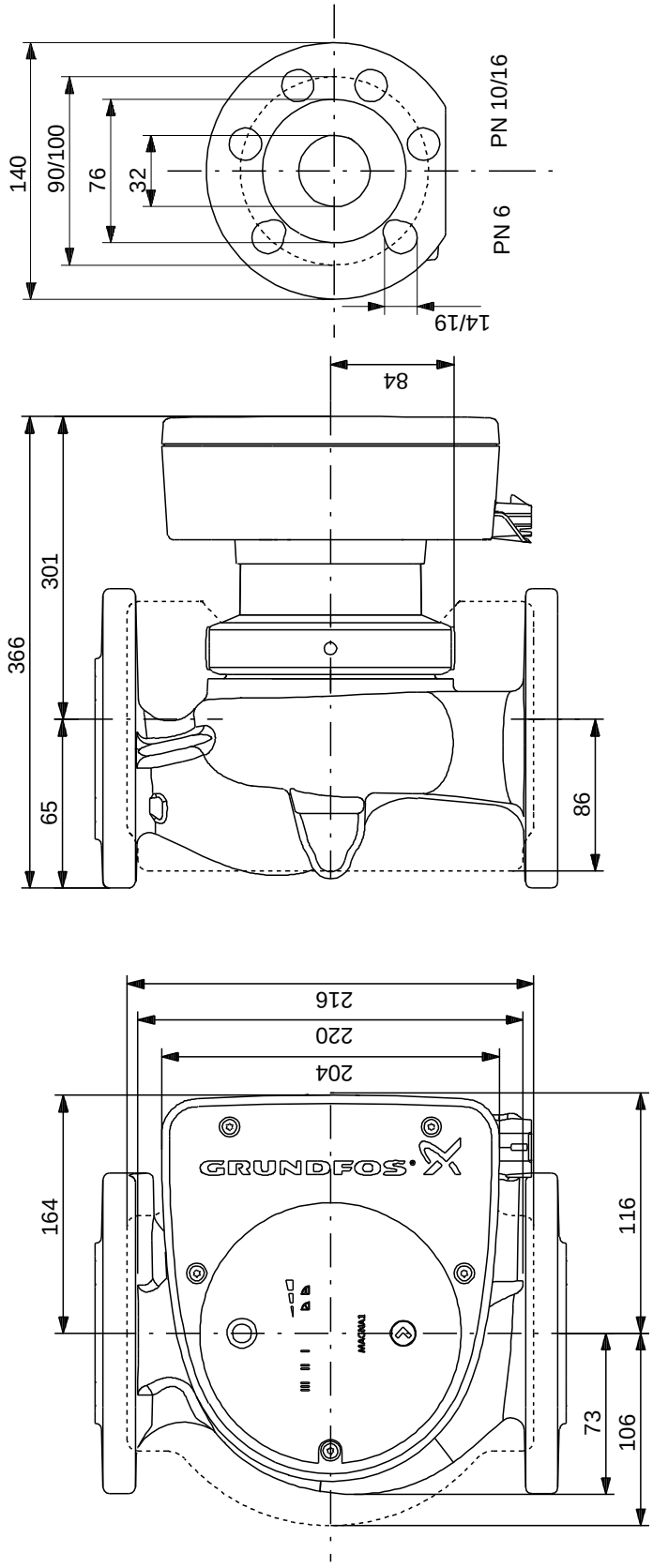

Note! All units are in [mm] unless others are stated.
Disclaimer: This simplified dimensional drawing does not show all details.

97924167 MAGNA1 32-120 F 50 Hz

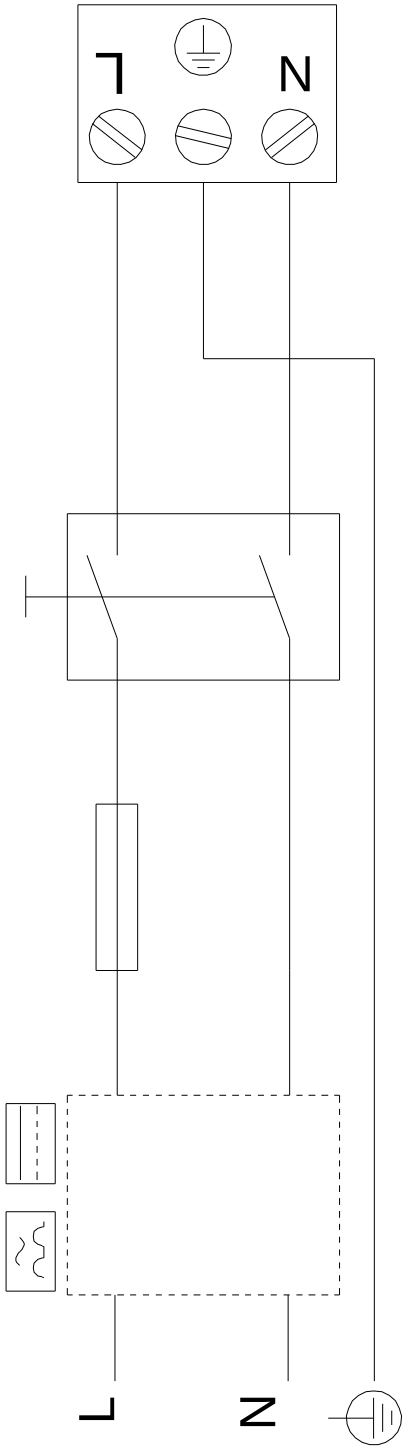

Notă! Toate unităţile sunt în [mm] dacă nu altele sunt condiţiile.